MAZU.

OYSTER
COLLECTION

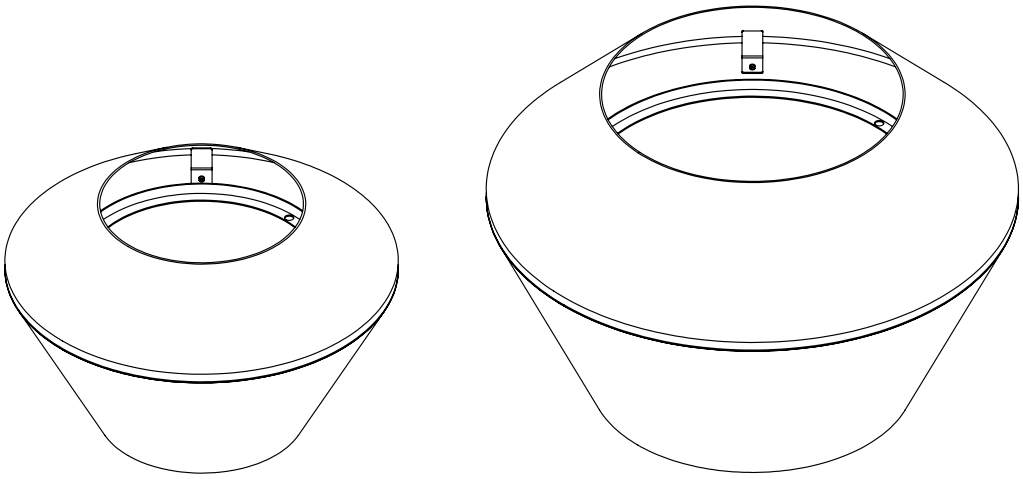

PRODUCT SPECIFICATIONS*

Material	Powdercoated Aluminium Cortensteel
Size	Medium: Ø850 x 550 mm - 2'9,5" x 1'9,7" Large: Ø1150 x 750 mm - 3'9,3" x 2'5,5"
Weight	Aluminium Medium: 17,5 kg - 38,6 lbs Aluminium Large: 31 kg - 68,3 lbs Cortensteel Medium: 49 kg - 108 lbs Cortensteel Large: 86,8 kg - 191 lbs
Power consumption	max. 150 W
Voltage	100-240 VAC - 50Hz
Connection	Hardwired, G3x1 mm^2 type H05RN-F recommended
Light source	Custommade LED, 14,4W/m, 140LED/m, 1250LM/m, 2700K, 24VDC CRI>85, Beam Angle 270°
Classification	Ingress protection IP65 (LED) CE Marking, EMC, LVD All components are CE and uL certified
Maintenance	Maintenance free wipe fresh stains with a damp cloth
Warranty	Warranty of 5 year after registration

* custom solutions on request, ask us about it!

FINISHES

LIGHT GREY C31			RUST RAME C32
BRONZE C33			BLACK BROWN C34
MOUNTAIN MOSS C35			IVORY C36
CUSTOM RAL	RAL		CORTEN STEEL

W: www.thisismazu.com
E: info@thisismazu.com
T: +32 3 846 6000

MAZU.

OYSTER
COLLECTION

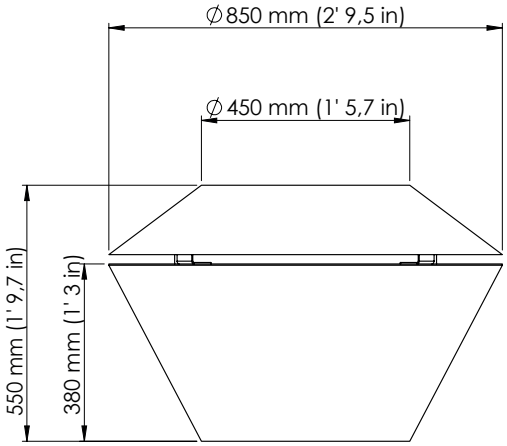

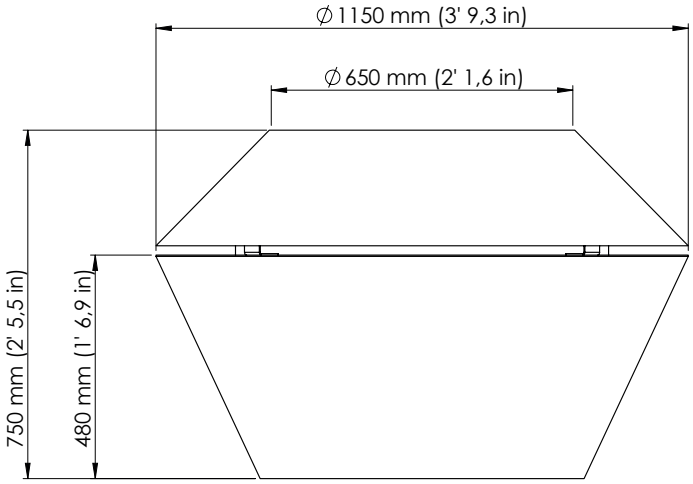

DRIVER SPECIFICATIONS*

Specifications	Bluetooth transmission technology, low power consumption
Dimmer	Fully Dimmable, control brightness/saturation
Classification	Ingress protection IP67 (DRIVER), CE Marking, EMC, LVD All components are CE and uL certified
Control	App Hardwired on existing system
Safety	All components must be correctly assembled and connected to maintain the waterproof rating of the system. The assembled MAZU products are officially certified by SGS to meet IP65 ingress protection requirements.

* custom solutions on request, ask us about it!

COMPATIBLE WITH

Casambi
Custom solutions

DALI
Custom solutions

Custom
solutions

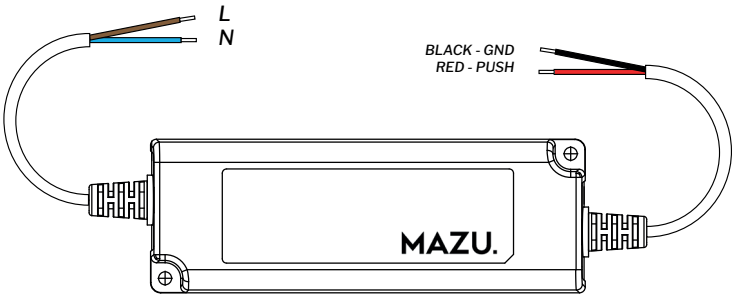

W: www.thisismazu.com
E: info@thisismazu.com
T: +32 3 846 6000